Depth Gage

A standard measuring tool of industry

Dial Depth Gage
SERIES 7

- Optimal for hole, narrow groove and step measurement.

7211A

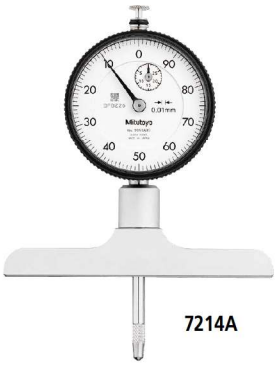

7214A

7222A

7224A

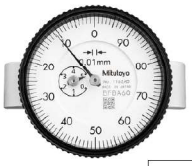

7231A

Typical application

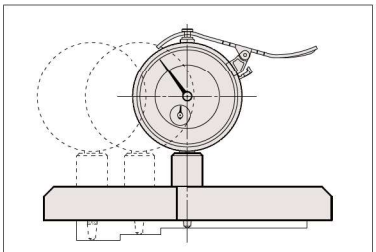

7220A and **7221A** allow the mounting position of a dial indicator to be varied.

Precautions

Note 1

Caution should be exercised when exchanging a contact point of a Depth Gage (Dial/Digimatic Indicator):

- If a different size contact point is mounted, displacement of the contact point from the base contact surface will be changed and as a result, measurement range may not be maintained.
- A contact point cannot be mounted to a Depth Gage if its diameter is too large for the hole diameter of the base.
- Parallelism adjustment with the bottom face of the base is required when mounting a flat contact point such as the flat/needle or carbide-tipped contact point.

Note 2

Caution should be exercised when using an extension rod:

- If the total length of the extension rod exceeds 110 mm (4.5 in) use the instrument in a vertical position (contact point downward).
- Use a master gage (such as gauge blocks) to perform zero-setting when the extension rod is mounted. (Master gage is an optional accessory.)

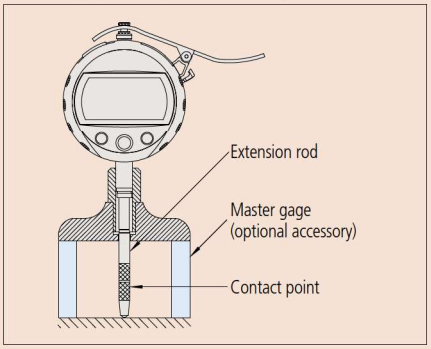

Note 3

Caution should be exercised when indicators are used on a Depth Gage:

- When the indicator is exchanged and a longer extension rod is connected, the contact-point may deflect significantly with an adverse effect on measuring accuracy.
- **Order No.543-400B/543-402B** for Depth Gage has a measuring force less than 1.5 N.

SPECIFICATIONS

Metric

Order No.	Range (mm)	Graduation (mm)	Stroke (mm)	Accuracy (µm)	Measuring force (N)	Base W (mm)	Base T (mm)	Base Flatness (µm)	Base Mounting position of a dial indicator	Contact point Note 1	Extension rod Note 2	Indicator Note 3 (dial indicator)
7210A	0 - 10	0.01	10	±15	1.4	40	16	5	1	Provided with a needle point (**137413**)	—	**2902ABD** for Depth Gage
7211A	0 - 200					63.5				Provided with a carbide-tipped ball point (**21JAA224**)	5 pcs. (10, 20, 30, 30, 100 mm)	**2902ABDL** for Depth Gage
7212A						101.6						
7213A	0 - 210		30	±30	2.5	63.5				Provided with a carbide-tipped ball point (**21JAA225**)	3 pcs. (30, 60, 90 mm)	**2952ABD** for Depth Gage
7214A						101.6						
7220A	0 - 200		10	±15	1.4	100	18		2	Provided with a carbide-tipped ball point (**21JAA224**)	5 pcs. (10, 20, 30, 30, 100 mm)	**2902ABDL** for Depth Gage
7221A						150			3			
7222A	0 - 10					ø16			1	Provided with a needle point (**137413**)	—	**2902ABD** for Depth Gage
7223A						ø25				Provided with a carbide-tipped ball point (**21JAA224**: 17 mm)		
7224A						ø40						
7231A	0 - 200		5			63.5	16				5 pcs. (10, 20, 30, 30, 100 mm) Interchangeable contact point (**21JAA226**: 22 mm)	**1162AD** for Depth Gage (Back plunger type)

Inch

Order No.	Range (in)	Graduation (in)	Stroke (in)	Accuracy (in)	Measuring force (N)	Base W (in)	Base T (in)	Base Flatness (in)	Base Mounting position of a dial indicator	Contact point Note 1	Extension rod Note 2	Indicator Note 3 (dial indicator)
7217A	0 - 8	0.001	1	±0.002	2.0	2.5	0.63	0.0002	1	Provided with a carbide-tipped ball point (**21JZA242**: 0.7 in)	3 pcs. (1 in, 2 in, 4 in)	**2904ABD** for Depth Gage
7218A						4						
7237A			0.2		1.4	2.5					4 pcs. (0.5 in, 1 in, 2 in, 4 in) Interchangeable contact point (**21JZA243**: 0.9 in)	**1168AD** for Depth Gage (Back plunger type)
7238A						4						

Mitutoyo reserves the right to change any or all aspects of any product specification, including prices, designs and service content, without notice.

DIMENSIONS

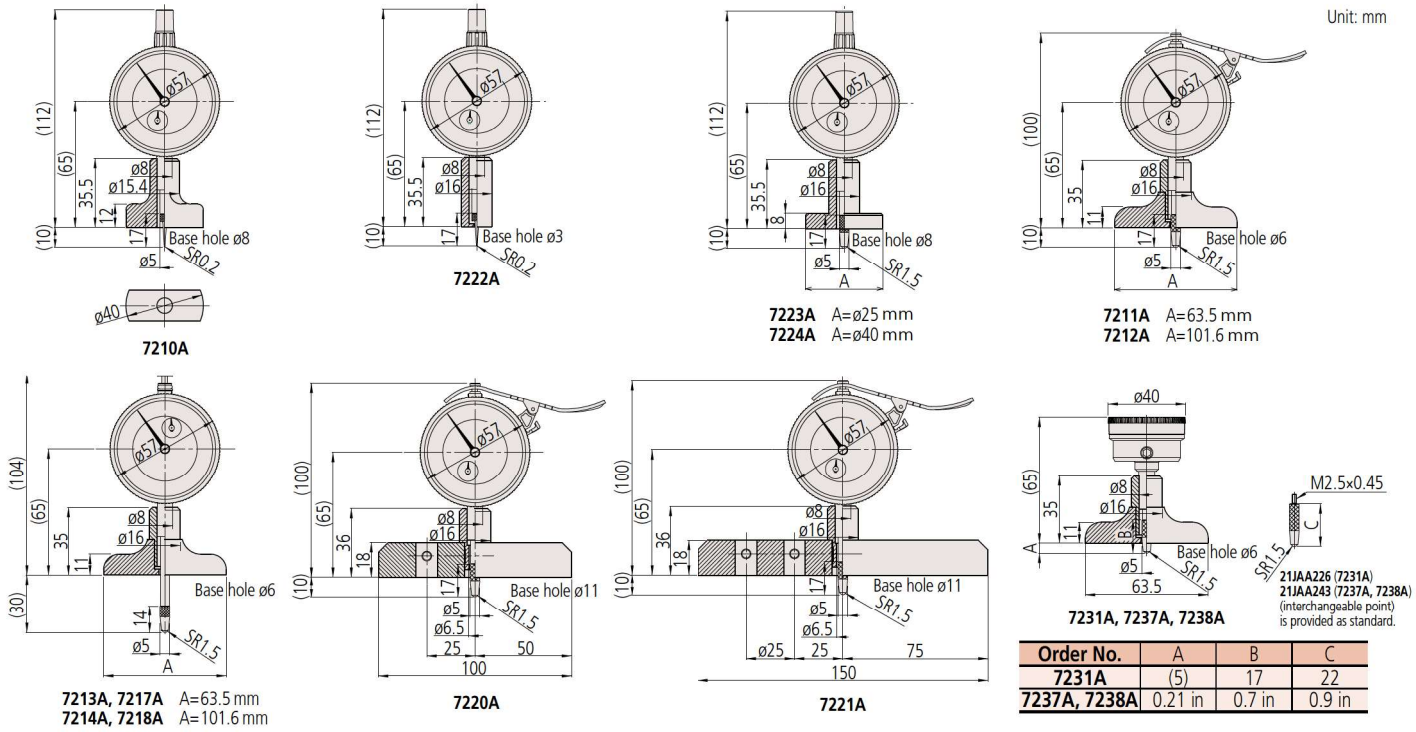

Order No.	A	B	C
7231A	(5)	17	22
7237A, 7238A	0.21 in	0.7 in	0.9 in

MeasurLink® ENABLED
Data Management Software by Mitutoyo

Products equipped with the measurement data output function can be connected to the measurement data network system MeasurLink® (refer to page A-25 for details).

ABSOLUTE Digimatic Depth Gage SERIES 547

MeasurLink® ENABLED
Data Management Software by Mitutoyo

ABSOLUTE™

- Easy-to-read dial effectively prevents misreading.
- Allows integration into statistical process control and measurement systems for models with measurement data output connector. (Refer to page A-3.)

547-211

DIMENSIONS

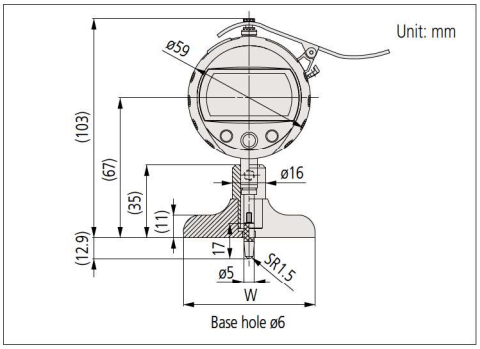

SPECIFICATIONS

Metric

Order No.	Range (mm)	Resolution (mm)	Stroke (mm)	Accuracy*1 (µm)	Measuring force (N)	Base W (mm)	Base T (mm)	Base flatness (µm)	Contact point*2	Extension rod*2	Indicator*2
547-211	0 - 200	0.01	12.7	±20	1.5	63.5	16	5	Provided with a carbide-tipped ball point (21JAA224)	5 pcs. (10, 20, 30, 30, 100 mm)	543-400B
547-212						101.6					
547-251		0.001		±5		63.5		2			543-390B
547-252						101.6					

Inch / Metric

Order No.	Range (in)	Resolution	Stroke (in)	Accuracy*1 (in)	Measuring force (N)	Base W (in)	Base T (in)	Base flatness (in)	Contact point*2	Extension rod*2	Indicator*2
547-217S	0 - 8	0.0005 in/0.01 mm	0.5	±0.001	1.5	2.5	0.63	0.0002	Provided with a carbide-tipped ball point (21JZA242)	4 pcs. (0.5 in, 1 in, 2 in, 4 in)	543-402B
547-218S						4					
547-257S		0.00005 in/0.001 mm		±0.0002		2.5		0.00008			543-392B
547-258S						4					

*1 Excluding quantizing error of ±1 count
*2 Refer to corresponding notes on page D-69.